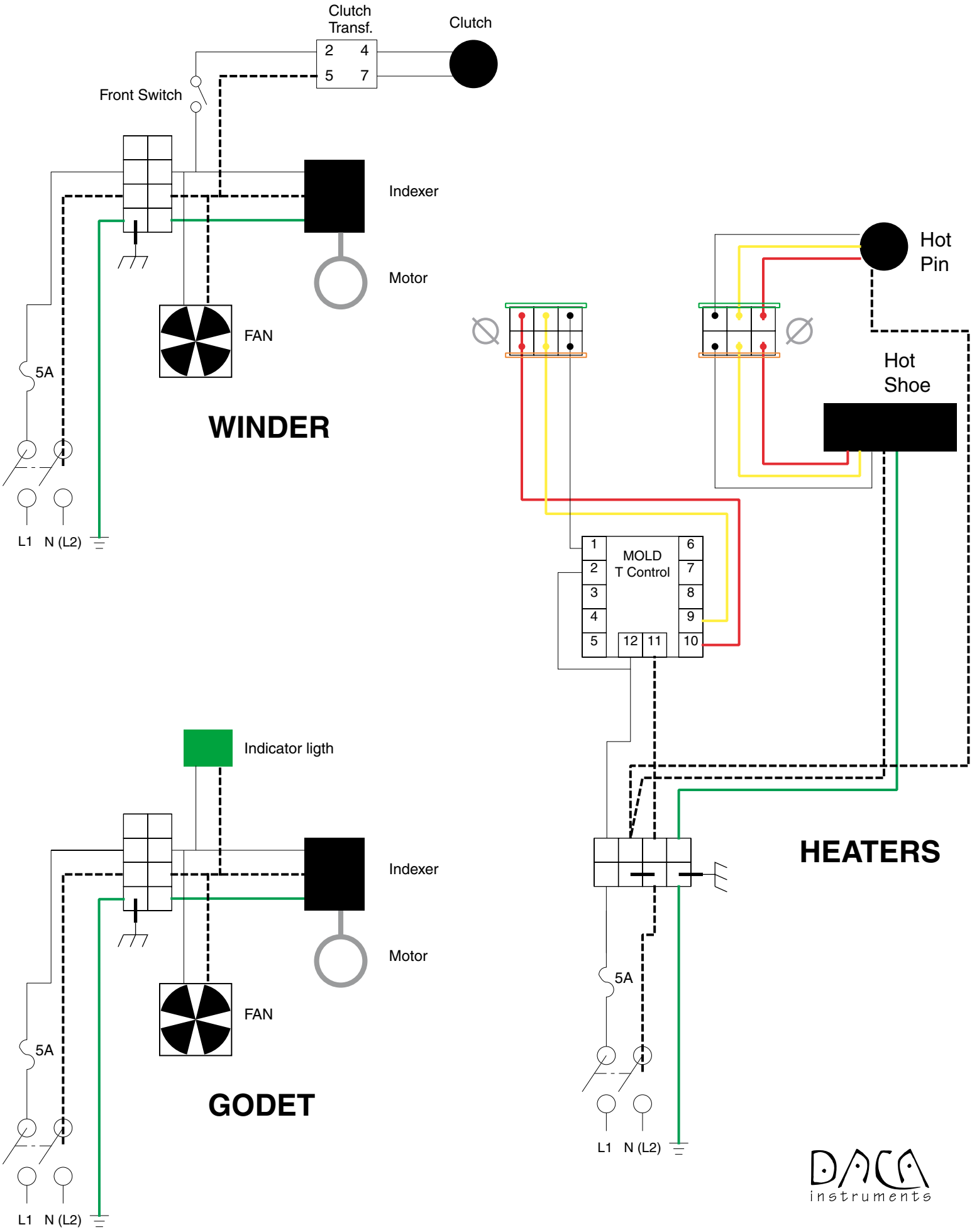
Clutch
Transf.
Clutch
2
4
5
7
Front Switch
Indexer
Motor
FAN
5A
WINDER
L1
N (L2)
Hot
Pin
Hot
Shoe
1
2
3
4
5
MOLD
T Control
6
7
8
9
10
12
11
Indicator ligth
Indexer
Motor
FAN
5A
GODET
L1
N (L2)
5A
HEATERS
L1
N (L2)
DACA
instruments